Pressure Sensors

CONTENTS

Application and Caution ····· 2

SD Series
/ Semiconductor Pressure Sensor Chip ····· 3

SP Series
/ Semiconductor Pressure Sensor ····· 4

SM Series
/ Semiconductor Pressure Sensor ····· 5

SSP Series
/ Semiconductor Pressure Sensor ····· 6

SPAN Series
/ Pressure Sensor Non-influenced by Noise ····· 7

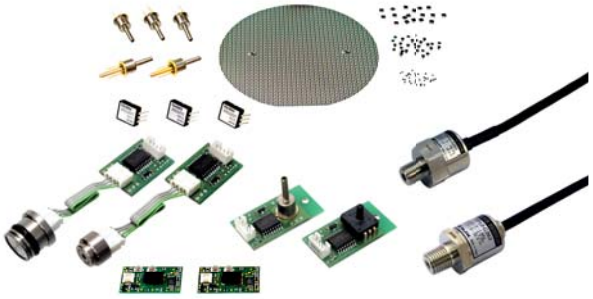

MKT-TAISEI Co.,Ltd.

Pressure Sensor Application

Micro-Pressure Range	Gas pressure control, washing machine water level control, filter clogging detection.
Low-Pressure Range	FA equipment such as vacuum cleaner clogging detectors, electronic blood pressure meter, weather forecast equipment, altimeter, water pressure detector, water depth measurement device, vehicle engine controller, compressor pressure controller, vacuum absorber and non-contact switches.
Low-Pressure Range	Vehicle suspension, vehicle break controller, air conditioner refrigerant pressure controllers and hydraulic controllers for building and construction equipment.

CAUTION

1) Use within the specified conditions. No warranty is made over specified conditions of use.
2) Avoid measuring corrosive pressure medium or in catalysis, unless otherwise, it would be the cause of defects.
3) Avoid measuring pressure medium in high temperature, unless otherwise, it would be the cause of defects.
4) Avoid measuring flammable pressure medium, unless otherwise, it would be the cause of explosion or fire.
5) Avoid disassembling, taking off a part or changing it.

Semiconductor Pressure Sensor Chip / SD Series

FEATURES

Corresponds to customization from design to mass production.
· Small chip size. (1 mm ~ 3 mm)
· Two model types are available. (absolute pressure and gauge pressure)
· Wide pressure specification. (10k ~ 50M Pa or 0.1 ~ 500 kg/cm^2)
· Low cost, high accuracy, high reliability, high breaking pressure resistance.

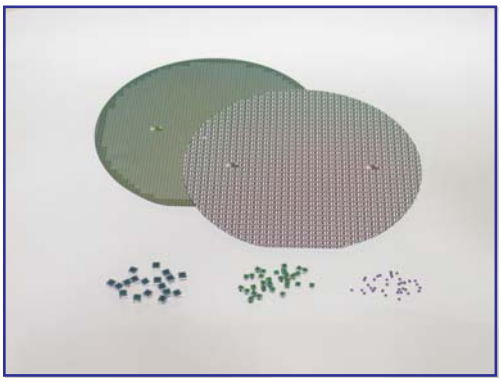

MODEL

SD 20 0C – A 103

- 103: Rated Pressure
- A: Type of Pressure — A: Absolute Pressure, G: Gauge Pressure
- 20: Chip Size

EXTERNAL DIMENSIONS AND TERMINAL ARRANGEMENT

Unit : mm

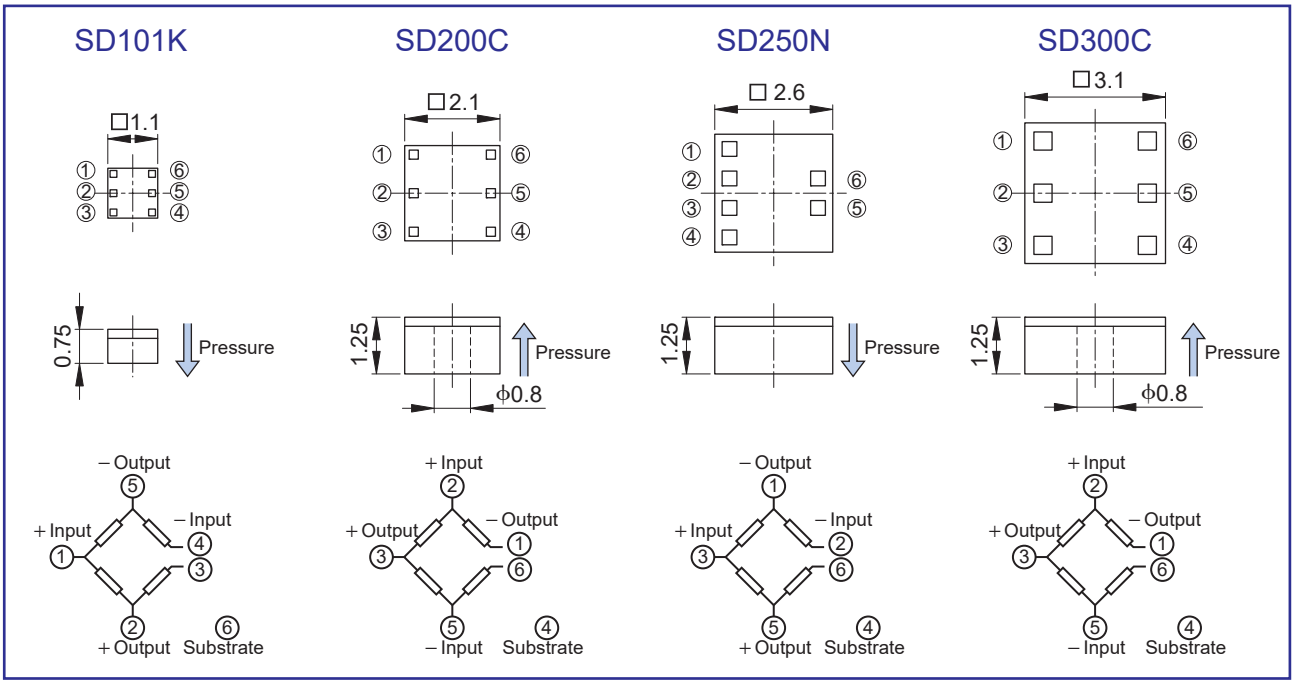

SPECIFICATIONS

Model No.		SD101K-A		SD200C-A or G					SD250N-A							SD300C-G		
		103	353	102	202	502	103	153	103	303	503	104	204	354	504	101	201	501
Rated Pressure	[Pa]	1M	3.5M	100k	200k	500k	1M	1.5M	1M	3M	5M	10M	20M	35M	50M	10k	20k	50k
Pressure Type		Absolute		Absolute or Gauge					Absolute							Gauge		
Maximum Overload Pressure		Rated Pressure X 3																
Temperature Range	[°C]	– 20 ~ 100		– 20 ~ 100					– 20 ~ 100							– 20 ~ 100		
Excitation Current	[mA]	1.0		1.0					1.0							1.5	1.0	
Bridge Resistance	[kΩ]	4 ± 1		5 ± 1					4.5 ± 1							5 ± 1		
Offset Voltage	[mV]	0 ± 25		0 ± 25					0 ± 25							0 ± 30	0 ± 25	
Output Span Voltage	[mV]	60 ~ 140		60 ~ 140					50 ~ 80							60 ~ 140		
Linearity	[%FS]	± 0.3		± 0.3					± 0.3				± 0.5			± 1.5	± 0.3	
Offset Voltage Temperature Characteristics * 1	[%FS/°C]	± 0.1		± 0.1					± 0.1							± 0.5	± 0.1	
Span Voltage Temperature Characteristics * 1	[%FS/°C]	± 0.05		± 0.05					± 0.05							± 0.2	± 0.05	
Chip Size	[mm]	$1.1^{+0.2}_{-0.1}$		$2.1^{+0.2}_{-0.1}$					$2.6^{+0.2}_{-0.1}$							$3.1^{+0.2}_{-0.1}$		
Chip Height	[mm]	$0.75^{\pm 0.2}$		$1.25^{\pm 0.2}$					$1.25^{\pm 0.2}$							$1.25^{\pm 0.2}$		
Stand Hole Diameter (Gauge Pressure)	[mm]	–		$0.8^{\pm 0.1}$					–							$0.8^{\pm 0.1}$		

NOTE *1 The temperature range is 0 to 60°C. If there is no specification, the temperature range is 25 ± 5°C.
These specifications are examples. Please contact us for other specifications.

⚠ Specifications of products are subject to change without notice.

e-sd-p01-11

TAISEI
http://www.mkt-taisei.co.jp/

株式会社MKTタイセー MKT TAISEI Co.,Ltd.
< Head Office > 3-10-8, Nohagi 1st Bldg, Minami-Ikebukuro, Toshima-ku, Tokyo, 171-0022, Japan.
PHONE : 81-3-3982-0029 FAX : 81-3-3986-1537 E-mail : info@mkt-taisei.com
< Kansai Branch > 3-18-9, Nishi-Nakajima, Yodogawa-ku, Osaka-City, 532-0011, Japan.
PHONE : 81-6-6390-7264 FAX : 81-6-6390-6945

FEATURES

The SP series is an inexpensive plastic package type (DIP type).
·These units correspond to regular equipment, measurement equipment, home electronic equipment, medical equipment and others.

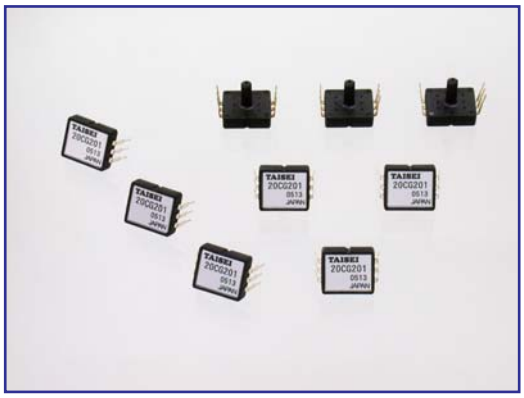

MODEL

SP20C – G 102 U

- U — Terminal Direction
- 102 — Rated Pressure
- G — Type of Pressure G : Gauge

EXTERNAL DIMENSIONS AND TERMINAL ARRANGEMENT

Unit : mm

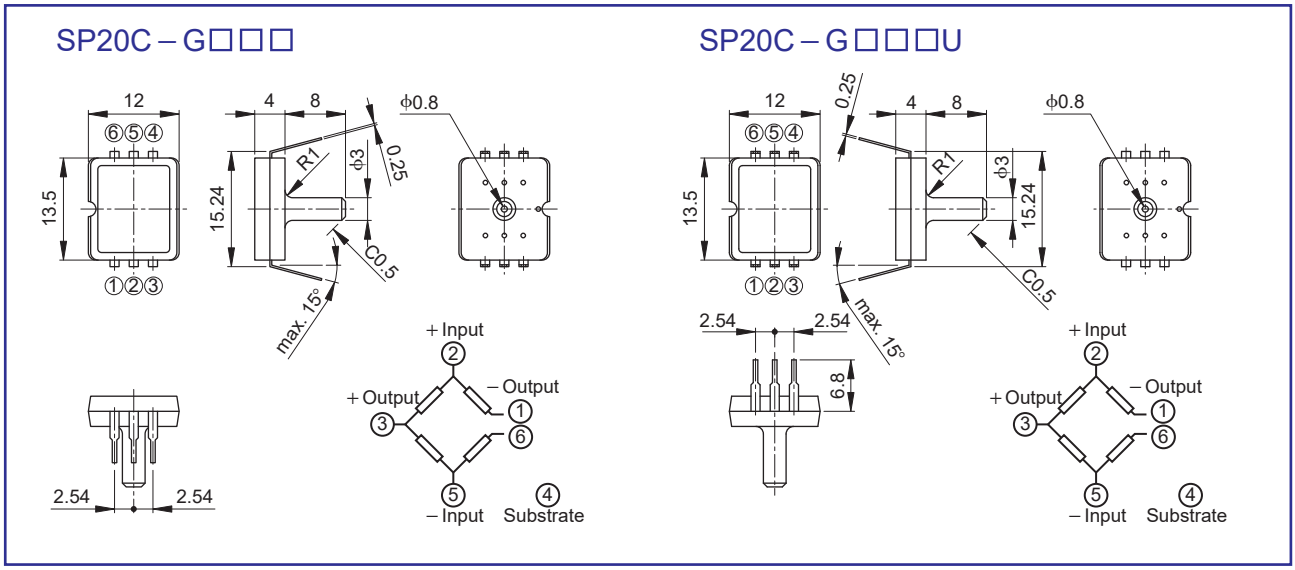

SPECIFICATIONS

Model No.		SP20C – G						
		101	201	501	102	202	502	103
Rated Pressure	[kPa]	±10	±20	±50	±100	– 100 ~ 200	– 100 ~ 500	– 100 ~ 1000
Pressure Type		Gauge						
Temperature range	[°C]	– 20 ~ 100						
Pressure Medium		Non-Corrosive Gases						
Excitation Current	[mA]	1.5	1.0					
Maximum Overload Pressure		Rated Pressure X 3						X 1.5
Output Span Voltage	[mV]	60 ~ 140						
Brige Resistance	[kΩ]	5±1						
Offset Voltage	[mV]	0±25		0±20				
Offset Voltage Temperature Characteristics *1	[%FS/°C]	±0.5		±0.1				
Span Voltage Temperature Characteristics *1	[%FS/°C]	±0.2		±0.05				
Linearity	[%FS]	±1.5		±0.3				

NOTE *1 The temperature range is 0 to 60°C. If there is no specification, the temperature range is 25±5°C.
These specifications are examples. Please contact us for other specifications.

⚠ Specifications of products are subject to change without notice.

TAISEI
http://www.mkt-taisei.co.jp/
株式会社MKTタイセー MKT TAISEI Co.,Ltd.
< Head Office > 3-10-8, Nohagi 1st Bldg, Minami-Ikebukuro, Toshima-ku, Tokyo, 171-0022, Japan.
PHONE : 81-3-3982-0029 FAX : 81-3-3986-1537 E-mail : info@mkt-taisei.com
< Kansai Branch > 3-18-9, Nishi-Nakajima, Yodogawa-ku, Osaka-City, 532-0011, Japan.
PHONE : 81-6-6390-7264 FAX : 81-6-6390-6945

FEATURES

The SM series are high precision and high durability metal can package type (TO-5 CAN equivalent package).

MODEL

SM20C – G 102

- 102 — Rated Pressure
- G — Type of Pressure: A : Absolute Pressure / G : Gauge Pressure

EXTERNAL DIMENSIONS AND TERMINAL ARRANGEMENT

Unit : mm

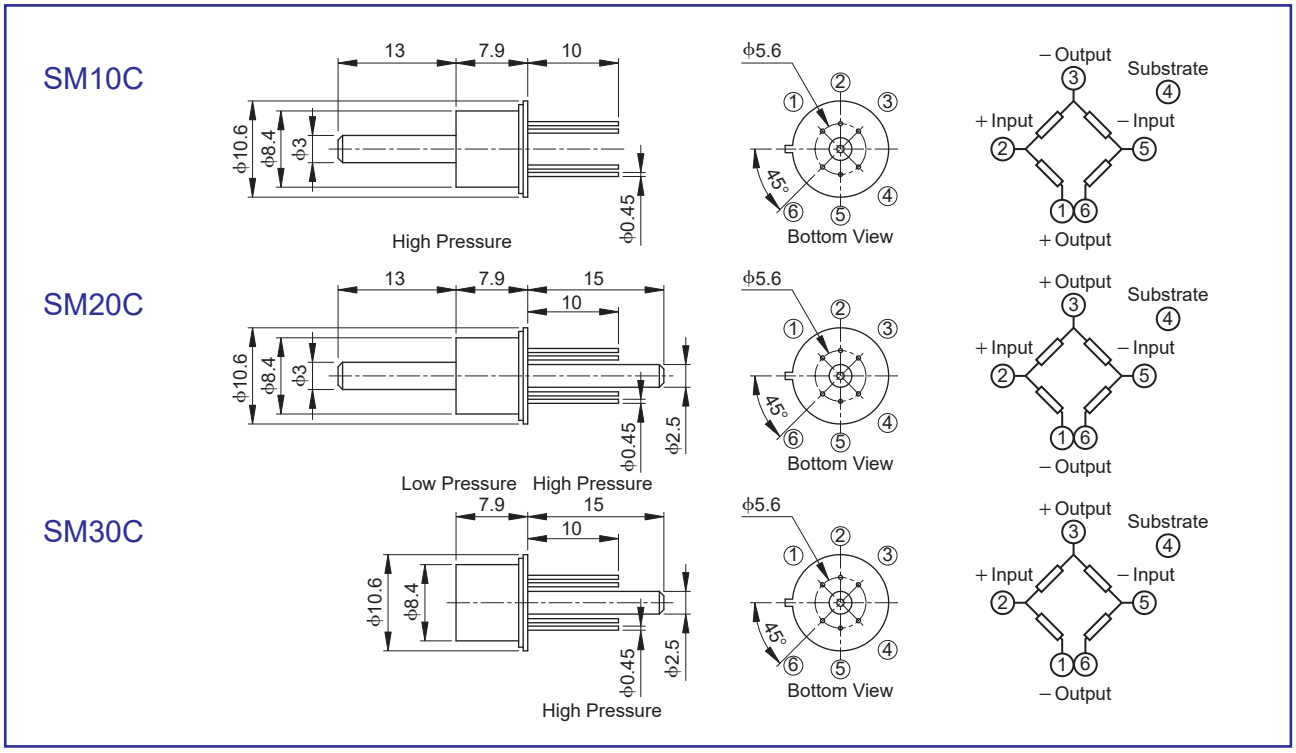

SPECIFICATIONS

Model No.		SM10C SM20C SM30C – A or G						
		101	201	501	102	202	502	103
Rated Pressure	[kPa]	±10	±20	±50	±100	–100 ~ 200	–100 ~ 500	–100 ~ 1000
Pressure Type		Absolute or Gauge						
Temperature Range	[°C]	–20 ~ 100						
Pressure Medium		Non-Corrosive Gases						
Excitation Current	[mA]	1.5	1.0					
Maximum Overload Pressure		Rated Pressure X 3						
Output Span Voltage	[mV]	60 ~ 140						
Bridge Resistance	[kΩ]	5±1						
Offset Voltage	[mV]	0±25		0±20				
Offset Voltage Temperature Characteristics *1	[%FS/°C]	±0.5		±0.1				
Span Voltage Temperature Characteristics *1	[%FS/°C]	±0.2		±0.05				
Linearity	[%FS]	±1.5		±0.3				

NOTE *1 The temperature range is 0 to 60°C. If there is no specification, the temperature range is 25±5°C.
These specifications are examples. Please contact us for other specifications.

⚠ Specifications of products are subject to change without notice.

TAISEI
http://www.mkt-taisei.co.jp/
株式会社MKTタイセー MKT TAISEI Co.,Ltd.
< Head Office > 3-10-8, Nohagi 1st Bldg, Minami-Ikebukuro, Toshima-ku, Tokyo, 171-0022, Japan.
PHONE : 81-3-3982-0029 FAX : 81-3-3986-1537 E-mail : info@mkt-taisei.com
< Kansai Branch > 3-18-9, Nishi-Nakajima, Yodogawa-ku, Osaka-City, 532-0011, Japan.
PHONE : 81-6-6390-7264 FAX : 81-6-6390-6945

FEATURES

The SSP11 series is a small plastic package type.
- ·Terminal types are DIP and SMD.
- ·Semiconductor pressure sensor with built-in amplification and temperature compensation circuit.
- ·Main applications
  - [General use] AV Products, Home Appliances, Office Equipment, Information and Communication Equipment, etc.
  - [Industrial use] Pressure Switches, Pneumatic Equipment, Compressed Air Pressure Measurement, etc.
  - [Medical use] Sphygmomanometer, Oxygen Concentrators, Air Beds, etc.

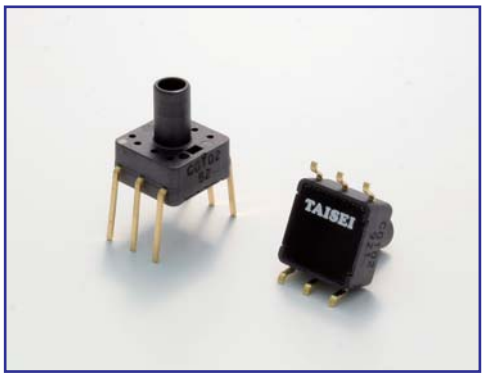

MODEL

SSP11 − PG 102 D − G □□

- □□ — Customized products (Standard products are not listed)
- G — RoHS compliant (standard)
- D — Terminal Type D : DIP, S : SMD
- 102 — Rated Pressure
- PG — Pressure Type PG : Gauge (+), VG : Gauge (−), CG : Gauge (±)

EXTERNAL DIMENSIONS AND TERMINAL ARRANGEMENT

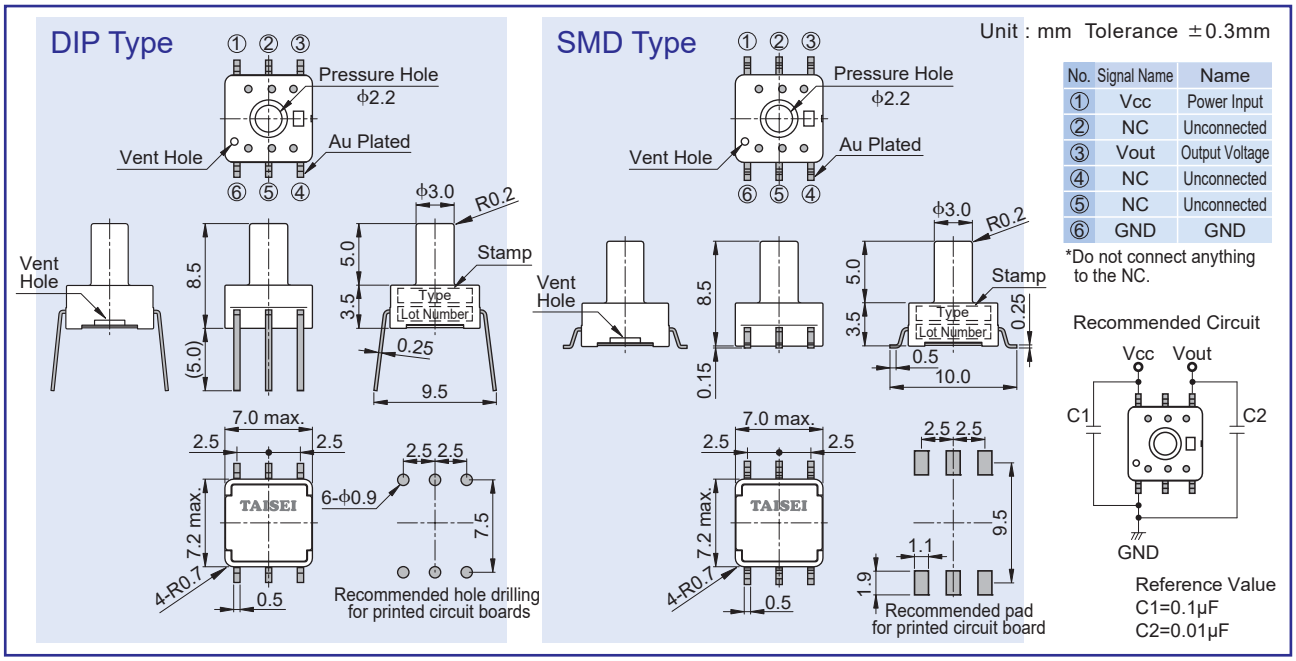

No.	Signal Name	Name
①	Vcc	Power Input
②	NC	Unconnected
③	Vout	Output Voltage
④	NC	Unconnected
⑤	NC	Unconnected
⑥	GND	GND

*Do not connect anything to the NC.

SPECIFICATIONS

Model No.		CG102	VG102	PG501	PG102	PG202	PG502	PG103
Terminal Type	D (DIP)	○	○	○	○	○	○	○
	S (SMD)	○	○	No Description	○	○	○	○
Rated Pressure	[kPa]	±100	−100	50	100	200	500	1000
Maximum Overload Pressure		Rated Pressure × 3						Rated Pressure × 1.5
Pressure Type		Gauge						
Pressure Medium		Non-Corrosive Gases						
Operating Temperature Range	[°C]	−20 ~ +85 (No Freezing and Condensation)						
Compensation Temperature Range	[°C]	0 ~ +60 (No Freezing and Condensation)						
Supply Voltage	[V]	5±0.25						
Offset Voltage *1,2,3	[V]	2.5	0.5					
Rated Output Voltage *1,2,3	[V]	4.5(At +100kPa)	4.5					
Total Accuracy *1,2	[%FS]	±1.25						
Maximum Current Consumption *1	[mA]	10 or less						

NOTE *1 Shows the characteristics at a supply voltage of 5.0 V. The value will fluctuate due to voltage fluctuations, but the error is not included. Unless otherwise specified, results are measured at 25°C.
*2 Output accuracy values are those at the time of our shipment.
*3 For stable use, please design that can compensate the zero point in case of offset voltage deviation.

⚠ Specifications of products are subject to change without notice.

TAISEI
http://www.mkt-taisei.co.jp/
株式会社MKTタイセー MKT TAISEI Co.,Ltd.
< Head Office > 3-10-8, Nohagi 1st Bldg, Minami-Ikebukuro, Toshima-ku, Tokyo, 171-0022, Japan.
PHONE : 81-3-3982-0029 FAX : 81-3-3986-1537 E-mail : info@mkt-taisei.com
< Kansai Branch > 3-18-9, Nishi-Nakajima, Yodogawa-ku, Osaka-City, 532-0011, Japan.
PHONE : 81-6-6390-7264 FAX : 81-6-6390-6945

Pressure Sensor Non-influenced by Noise / SPAN Series

FEATURES

Can be used in environments where high-frequency noise occurs.

- Insulation separation structure is adopted in the sensor case.
- High output and high reliability achieved through combination of metal diaphragm and thin film gauge.
- High insulation.
- Wide operating temperature range.
- Small size.

EXTERNAL DIMENSIONS AND TERMINAL ARRANGEMENT

Unit : mm

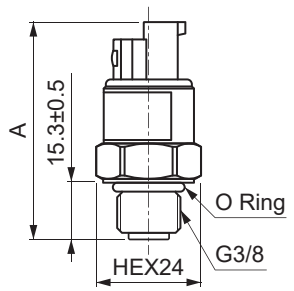

Terminal Arrangement

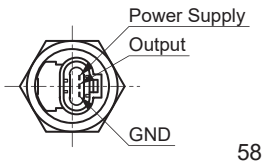

Dimensions:A

Specifications	A
Voltage Output	58±2
Current Output	68±2

Wire Color

Signal Name	Wire Color
Power Supply	Red
GND	Black
Output	White

58 connector V Type Part No.

M terminal	7114-1260
M housing	Dedicated Housing
F terminal	7116-1261
F housing	7123-1835
Waterproof Stopper	7157-3596-30

Recommended Dimensions for Sensor Mounting Holes

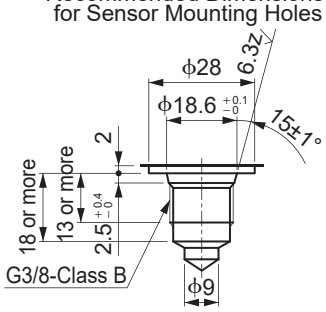

SPECIFICATIONS

Model No.	SPAN-○○-△□
Rated Pressure	5・10・20・35・50 MPa
Overload	150%FS
Total Accuracy	±1.0%FS or less
Operating Temperature range	−40 ~ +120 °C (at DC 5V)
Compensation Temperature range	−20 ~ +85 °C
Power Supply	DC 5V・12V・24V
Output	0.5 ~ 4.5V・1 ~ 5V・4 ~ 20mA
Zero temperature Characteristics	Within ±0.025%FS/°C
Span temperature Characteristics	Within ±0.025%FS/°C
Response Time	2 ms or less
Weight	About 60 g
IP Protection Rating	IP67equivalent

Total Accuracy = $\sqrt{(\text{Linearity})^2 + (\text{Hysteresis})^2 + (\text{Reproducibility})^2}$

Structure to Isolate Insulation

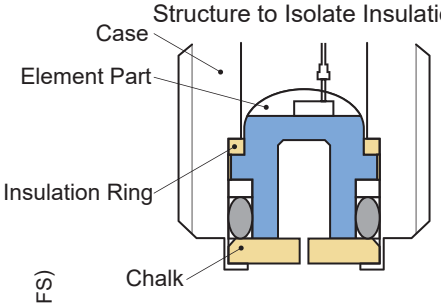

Sensor Output Fluctuation Due to Noise

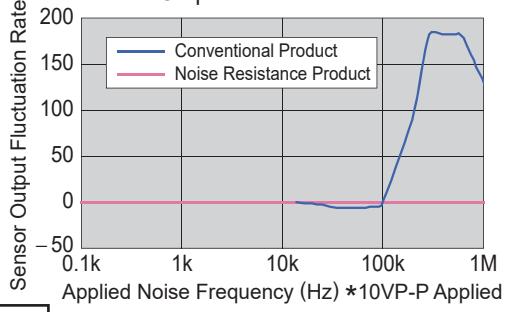

MODEL NUMBER CONFIGURATION

SPAN — ① — ② ③

①Rated Pressure		
	05	5 MPa
	10	10 MPa
	20	20 MPa
	35	35 MPa
	50	50 MPa

②Input Voltage		
Voltage Output Specifications	5	5 V
	6	12 V
Current Output Specifications	7	24 V

③Output Format		
Voltage Output	H	0.5 ~ 4.5 V
	G	1 ~ 5 V
Current Output	I	4 ~ 20 mA

Ex.1) 10 MPa・Input Voltage 12 V・Voltage Output (0.5 to 4.5 V) → SPAN-10-6H

Ex.2) 50 MPa・Input Voltage 24 V・Current Output → SPAN-50-7I

NOTE : When using current output, install a load resistor between the sensor output and GND. Recommended load resistance : 150~350Ω

⚠ Specifications of products are subject to change without notice.

e-span-p01-04

TAISEI
http://www.mkt-taisei.co.jp/

株式会社MKTタイセー MKT TAISEI Co.,Ltd.

< Head Office > 3-10-8, Nohagi 1st Bldg, Minami-Ikebukuro, Toshima-ku, Tokyo, 171-0022, Japan.
PHONE : 81-3-3982-0029 FAX : 81-3-3986-1537 E-mail : info@mkt-taisei.com

< Kansai Branch > 3-18-9, Nishi-Nakajima, Yodogawa-ku, Osaka-City, 532-0011, Japan.
PHONE : 81-6-6390-7264 FAX : 81-6-6390-6945

TAISEI Co.,Ltd.

HEAD OFFICE 6972, Shimo-yoshida, Chichibu-shi, Saitama-ken, 369-1593, Japan.
TEL:81-494-77-1211 FAX:81-494-77-1415

(BUSINESS)
MKT-TAISEI Co.,Ltd.

HEAD OFFICE 3-10-8, Nohagi 1st Bldg, Minami-ikebukuro, Toshima-ku, Tokyo, 171-0022, Japan.
TEL:81-3-3982-0029 FAX:81-3-3986-1537
E-mail : info@mkt-taisei.com
KANSAI BRANCH 3-18-9, Nishi-nakajima, Yodogawa-ku, Osaka-shi, 532-0011, Japan.
TEL:81-6-6390-7264 FAX:81-6-6390-6945

URL : http://www.mkt-taisei.co.jp/